RoHS

Version No.	Modification	Date
A		

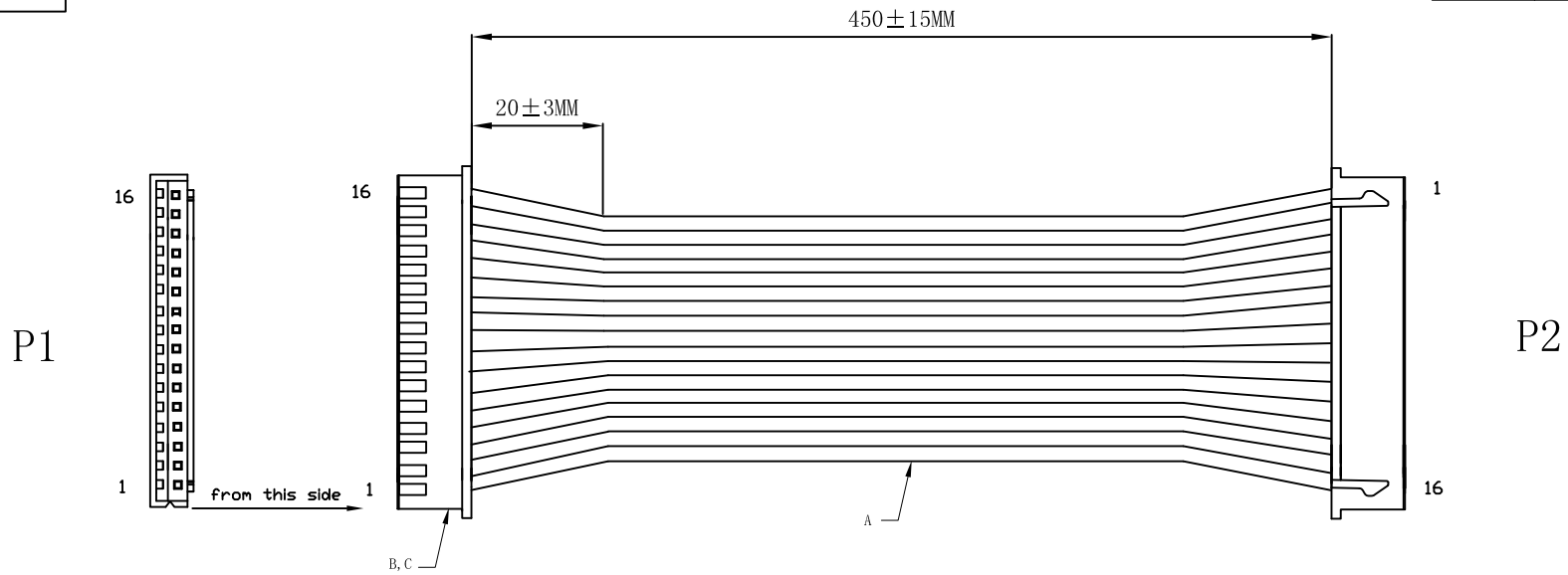

PIN WIRING

P1	P2
16	1
15	2
⋮	⋮
2	15
1	16

1.100% open & short &miswire testing

2. All material are ROHS compliant

NO.	Product name	Specification	Q'TY	Remark
J				
I				
H				
G				
F				
E				
D				
C	HOUSING	JST XH2.5-16P(equivalent)	2PCS	
B	TERMINAL	JST XH2.5-T(equivalent)	32PCS	
A	WIRE	UL2468 26AWG (7/0.16TS) 8P RED/WHITE	2PCS	

ECOCABLES

Ecocables Electronics Co.,Ltd

www.ecocables.net

Customer		Customer No.				
Material name			Approved	Tim. Z		
Unit	Scale	Free	Checked	Daivd.L	Revision date	
mm			Drawn by	Percy.F	Drawn date	Oct 29,2015