RoHS

Version No.	Modification	Date
A	change 6+-2mm to 3-8mm	Apr 25,2016

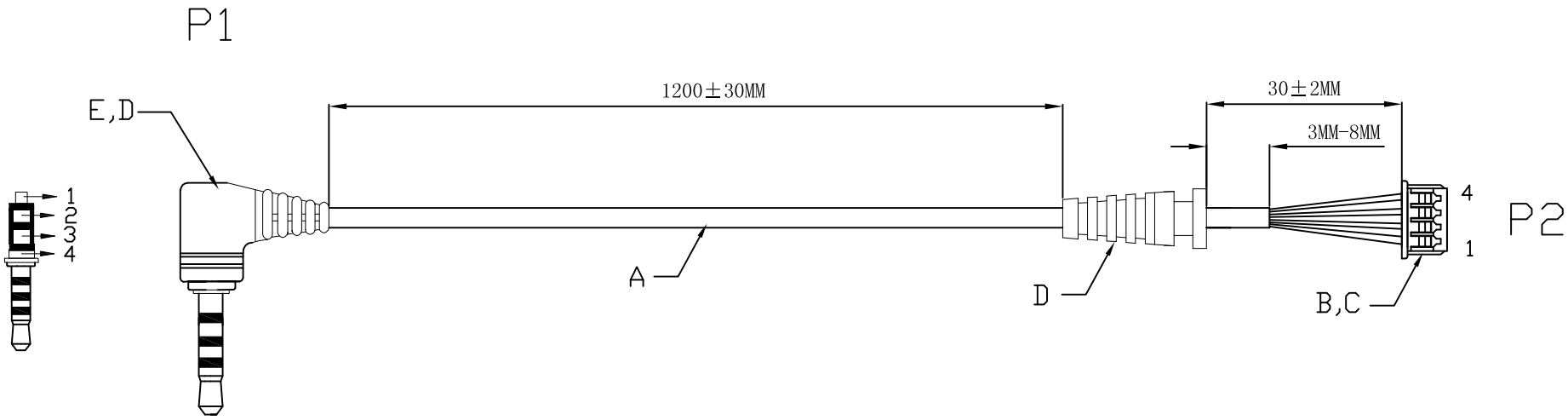

package:

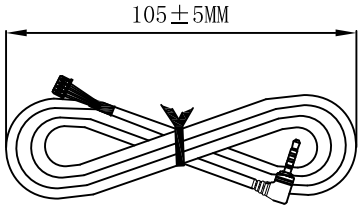

PIN WIRING

P1 PIN 1	RED	P2 PIN 2
P1 PIN 2	YELLOW	P2 PIN 3
P1 PIN 3	WHITE	P2 PIN 1
P1 PIN 4	GREEN	P2 PIN 4

NO.	Product name	Specification	Q'TY	Remark
E	PLUG	2.5/4 PLUG GOLDEN-PLATED	1PCS	
D	PVC	PVC BLACK	14g	
C	TERMINAL	MLX51021-T(equivalent)	4PCS	
B	HOUSING	MLX51021-4P(equivalent)	1PCS	
A	CABLE	NOUL#30*4C (7/0.1AS) RED,YELLOW,GREEN,WHITE ID0.75MM OD2.3MM JACKET:BLACK PVC	1PCS	

Ecocables Electronics Co.,Ltd
www.ecocables.net

Customer		Customer No.				
Material name			Approved	Tim. Z		
Unit	Scale	Free	Checked	Daivd.L	Revision date	Apr 25,2016
mm			Drawn by	Percy.F	Drawn date	Feb 26,2016